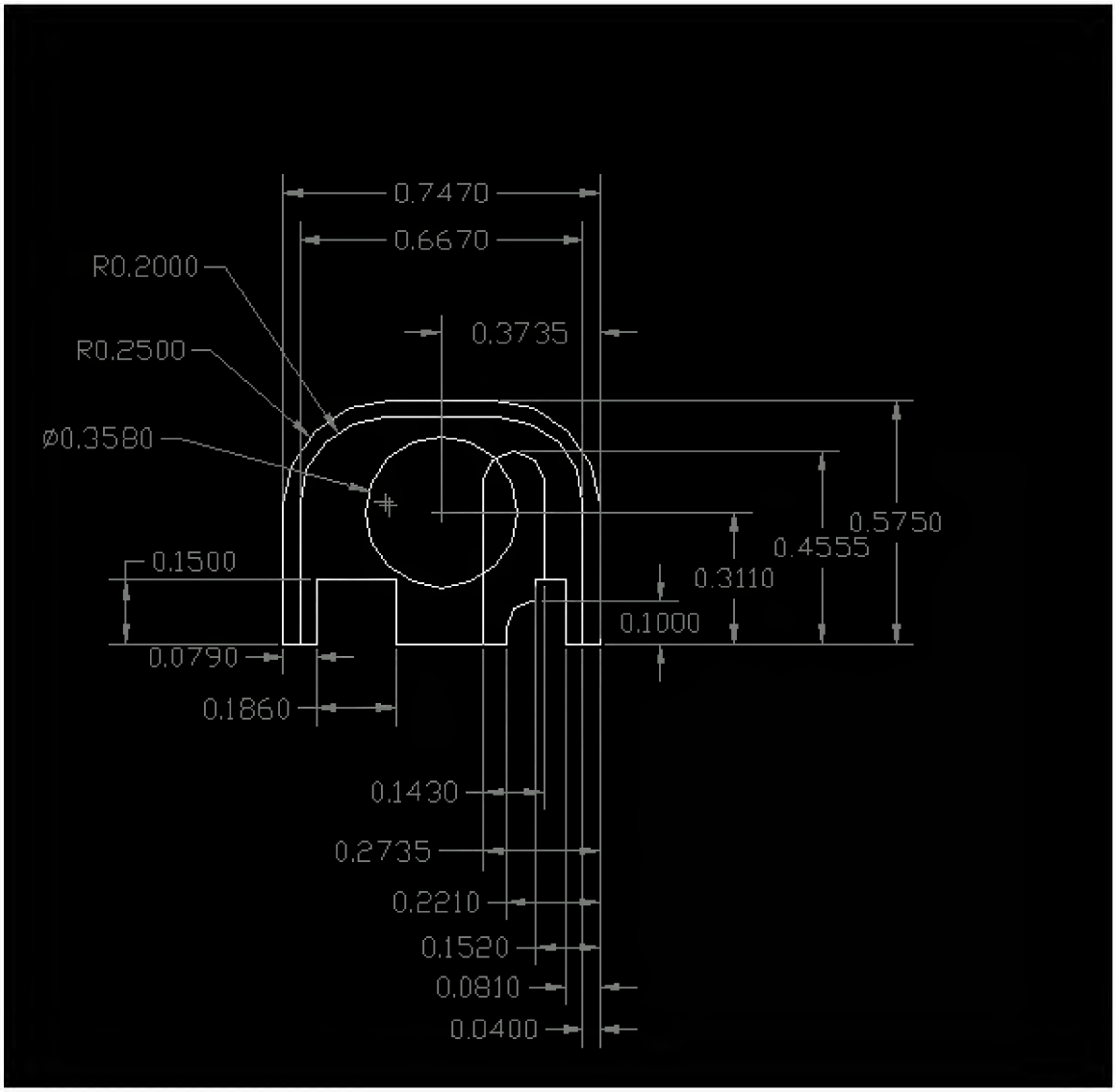
0.7470
0.6670
R0.2000
R0.2500
0.3735
ø0.3580
0.5750
0.4555
0.3110
0.1500
0.1000
0.0790
0.1860
0.1430
0.2735
0.2210
0.1520
0.0810
0.0400

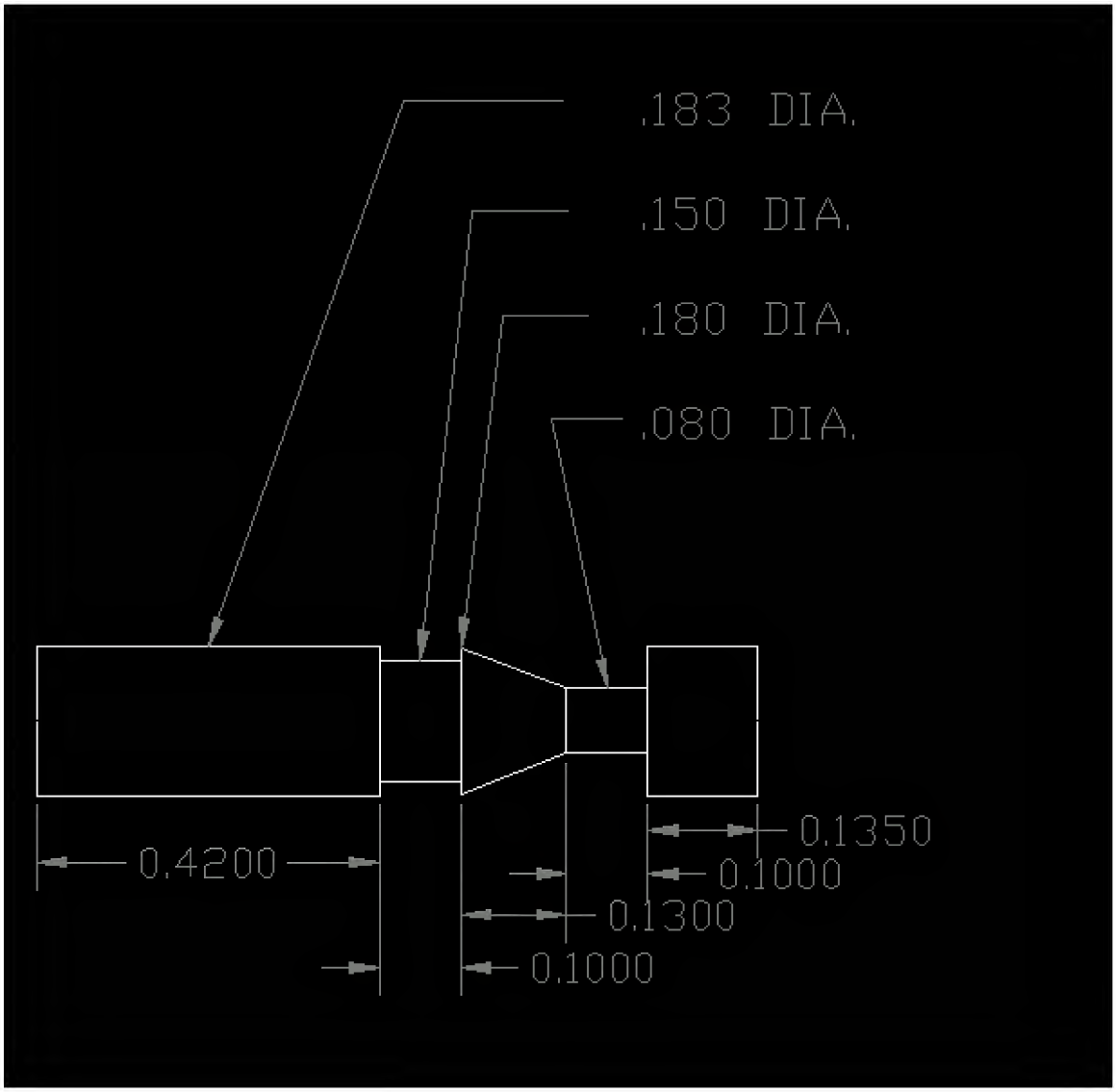
.183 DIA.
.150 DIA.
.180 DIA.
.080 DIA.
0.4200
0.1350
0.1000
0.1300
0.1000

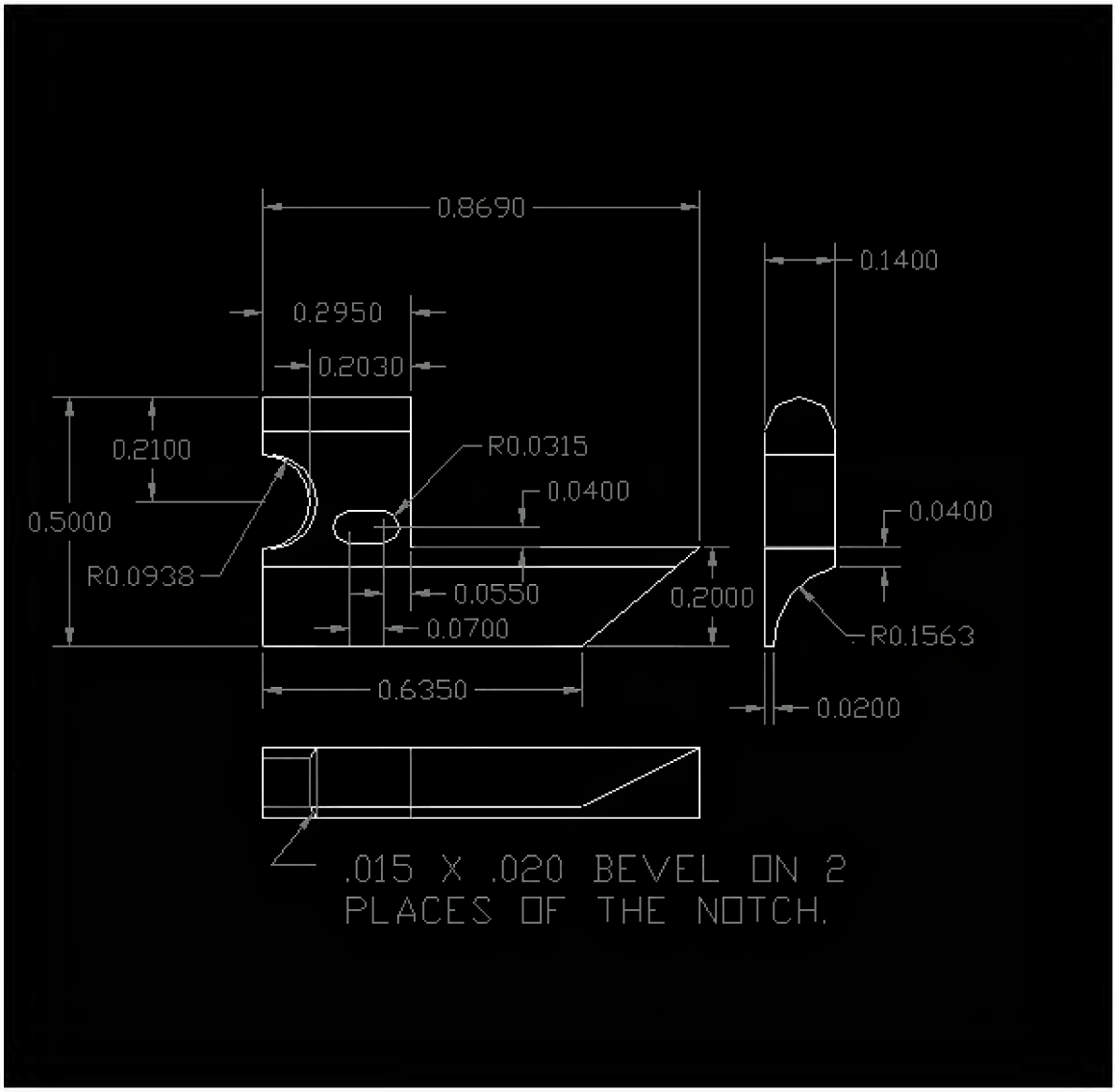
0.8690
0.1400
0.2950
0.2030
0.2100
R0.0315
0.0400
0.5000
0.0400
R0.0938
0.0550
0.2000
0.0700
R0.1563
0.6350
0.0200
.015 X .020 BEVEL ON 2
PLACES OF THE NOTCH.

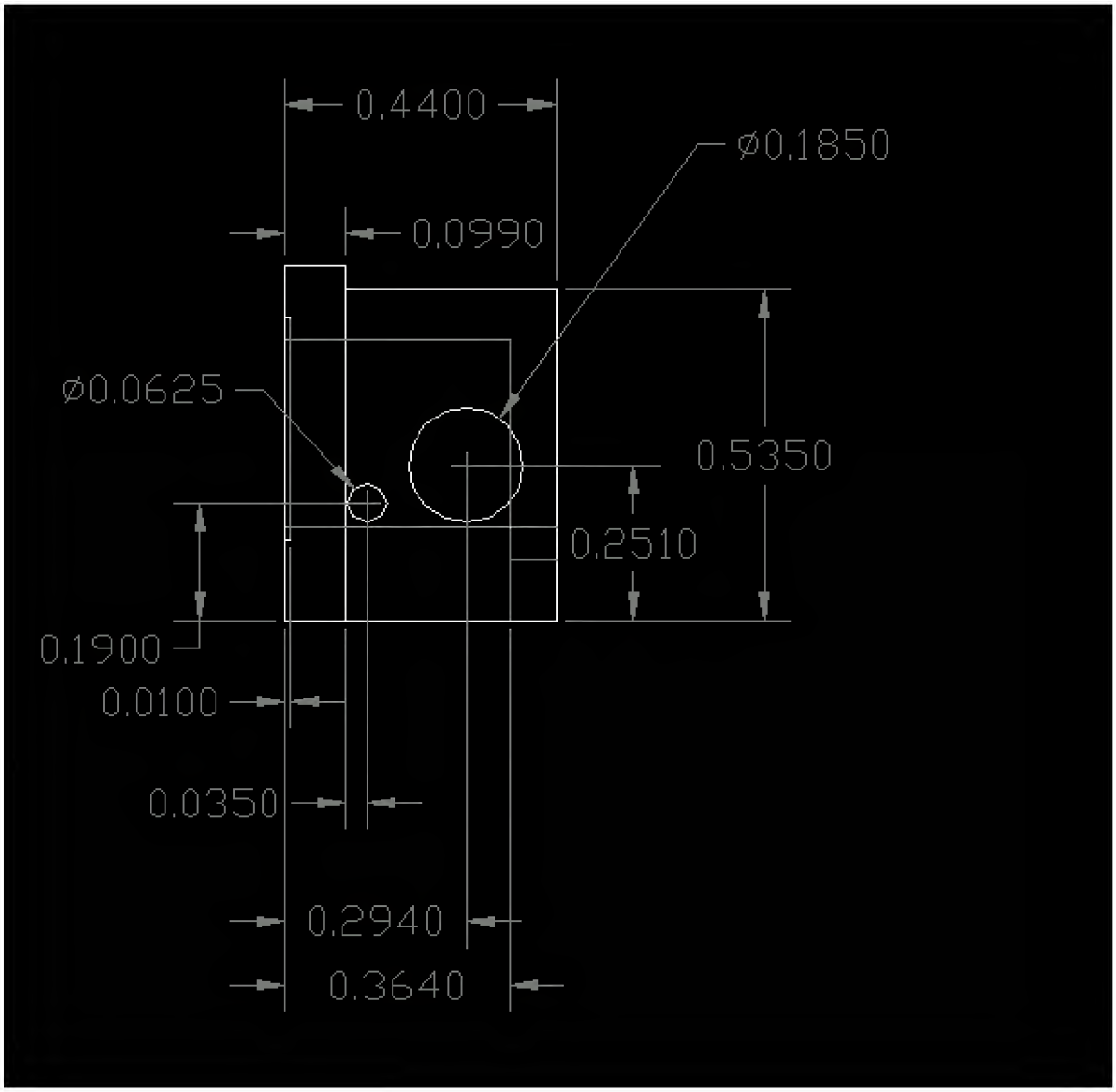
0.4400
Ø0.1850
0.0990
Ø0.0625
0.5350
0.2510
0.1900
0.0100
0.0350
0.2940
0.3640

INSTALLATION PROCEDURE FOR THE GLOCK 9MM PISTOLS

All NFA Rules and Regulations Apply!

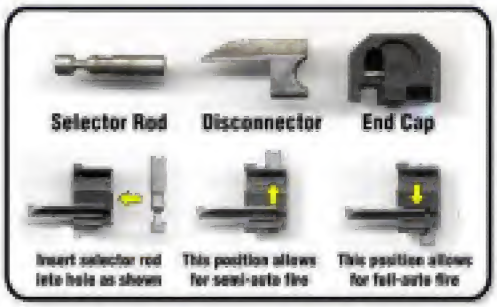

Step (1) Assembly Of The Unit:

Your Glock device consists of three parts: Selector Rod, Disconnector, and an End Cap. These three items will replace your existing plastic "End Cap" located on the back most part of your Glock 9mm pistol. These pictures show the assembled unit along with the two positions for the "Selector Rod".

Please note that when the "Selector Rod" is set for full-auto fire, you are still able to control the amount of fire from the pistol through trigger pull. A short, quick trigger pull will release a small burst while a lengthy pull will release as many as your Glock 9mm magazine can hold.

Proper care should be given to all parts of the device assembly as well as observing all BATF laws and regulations relevant to this device.

Step (2) Preparing For Installation:

Verify that you are working with a UNLOADED weapon by inspecting the chamber for loose rounds and any magazines that may be used in the process of installing the Glock device. Pull back the slide of your Glock with an EMPTY magazine installed. This places the weapon in the "Out of Ammo" mode. This will allow you to comfortably install the Glock device without disassembly of the weapon. Have a sturdy key or screwdriver handy for installation. Be careful not to damage any surrounding parts and above all, do not force the parts!.

Step (3) Preparing For Installation:

Use you sturdy car key or a flathead screw driver between the firing pin notch and the firing pin jacket as shown in the illustration to the left. Push the key or screwdriver towards the front of the gun. This will allow you to remove the existing end cap

Step (4) Preparing For Installation:

While you are holding back the firing pin you can now easily remove the existing end cap as shown in illustration (a). After you have successfully removed the existing end cap, again use the key or screwdriver to push the firing pin jacket from the rear to allow your fully assembled Glock device to slip over and into the empty end cap slot as shown in illustration (b). Use the key or screwdriver again to push back the extractor plunger to allow the fully assembled device to completely slide into the end cap slot as shown in illustration (c).

Step (5) Preparing For Test Firing:

Pull and release the slide several times to allow the device to create a small channel for the disconnector on the frame. Your Glock pistol is now ready to test fire. Please see the illustrations above for setting the "Selector Rod" to allow for full-auto or semi-auto fire.

Troubleshooting:

If the pistol does not close or closes improperly simply disassemble the device from the weapon and replace with the standard "End Cap". If the slide now closes, the problem is with the disconnector. There are two possible reasons for this:

(1) The disconnector's gap has not formed. (Verify that there is a gap formed by the disconnector. If not, repeat step (5) after reassembly.

(2) The curved part of the disconnector does not allow the trigger to complete a cycle. There are two methods to correct this:

- (a) With a Dremel tool and a sanding stone you could enhance the disconnector's shape. (caution not to over-sand).
- (b) With a Dremel tool and a sanding cylinder you can smooth out the trigger bar's little notch (you should disassemble the pistol before doing this).

Installing the Device without selector bar or disconnector (and further troubleshooting):

If you wish to install the device without the selector rod and the disconnector you may still have difficulty with a non-closing slide. Try the following:

(1) Using sand paper, sand the left side (square protuberance on the top) allowing the device to enter with the slide over the frame

(2) Use a small file to file the device a small amount in the recesses opposite to the disconnector.